RECYCLE - INTERMEDIATE HANDOUT

Paper Process Flow Chart

Paper is collected and separated into grades, according to market needs.

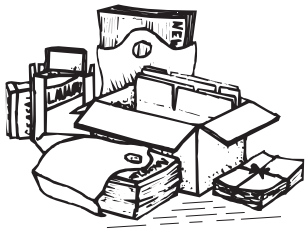

Paper is churned in a pulper with special soaps.

Pulp is filtered and screened to remove contaminants.

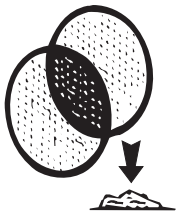

In floatation cells, air bubbles take inks, soaps and clay filler out of **pulp** to the surface to be skimmed off.

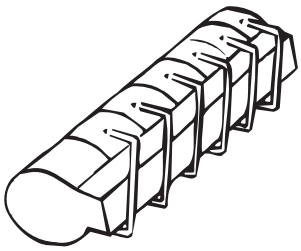

Ink can be recycled.

De-inked pulp is mixed with **new pulp.**

New pulp is added.
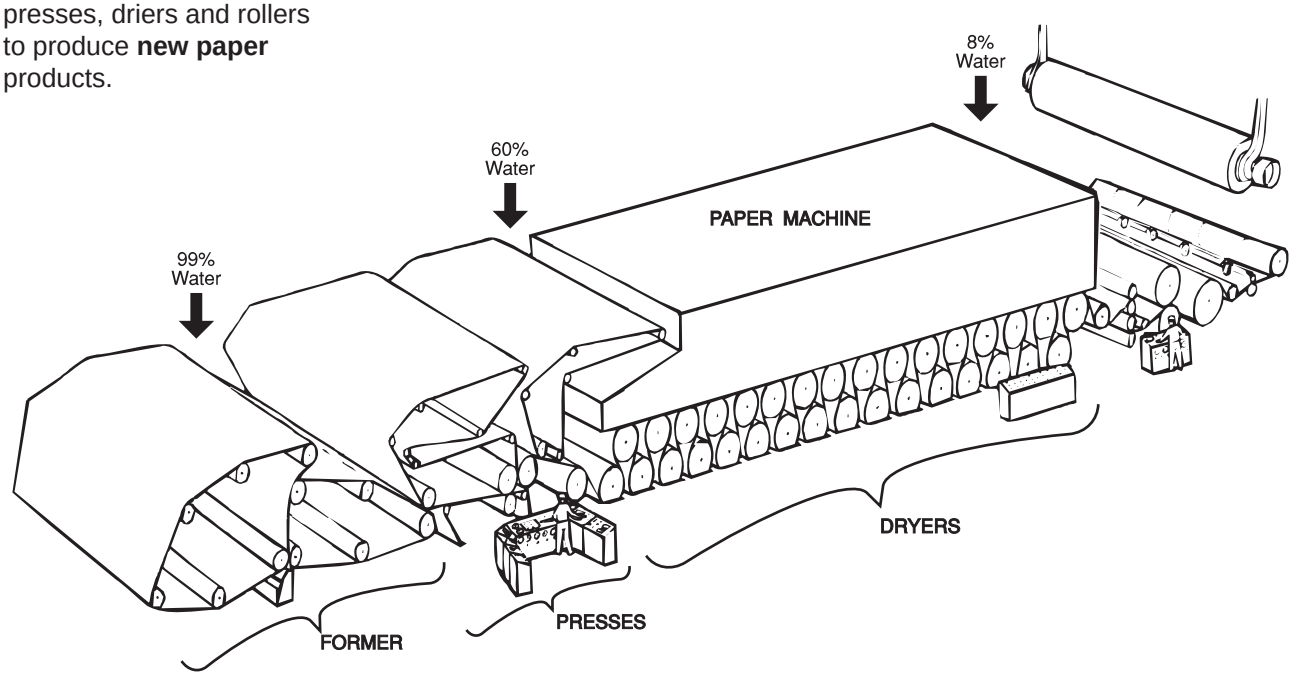
Mixed pulp goes through presses, driers and rollers to produce **new paper** products.